USB controlled Relay

Variant: [No Variations]

Revision: A

RELEASED Oct-01-2024

Page	Index	Page	Index	Page	Index
1	Cover Page	11	.....	21	.....
2	Revision History	12	.....	22	.....
3	Main Schematics	13	.....	23	.....
4	.....	14	.....	24	.....
5	.....	15	.....	25	.....
6	.....	16	.....	26	.....
7	.....	17	.....	27	.....
8	.....	18	.....	28	.....
9	.....	19	.....	29	.....
10	.....	20	.....	30	.....

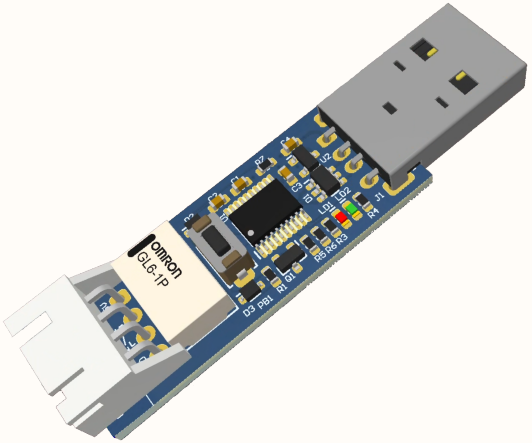

DESIGN CONSIDERATIONS

RevisionHistory

MainSchematics

DESIGN NOTE:
Example text for informational design notes.

DESIGN NOTE:
Example text for critical design notes.

DESIGN NOTE:
Example text for cautionary design notes.

LAYOUT NOTE:
Example text for critical layout guidelines.

Project: *USB controlled Relay*		Revision: *A*
Title: **Cover Page**		
Sheet: 1 of 3	Author: Alfredo Cortellini	
Date: Oct-01-2024	License: CC BY-NC-SA 4.0	

ITLogic

BY NC SA

REVISION HISTORY

DATE	*PAGES*	*REVISION*
Oct-01-2024	**N/A**	**Initial release A**

Main microcontroller

A full-speed USB has a differential characteristic impedance (Z0) of 90 Ω ±15%, a common mode impedance (ZCM) of 30 Ω ±30%, and a maximum one-way delay of 26 ns.
Full Speed rise fall time min 4ns max 20ns.

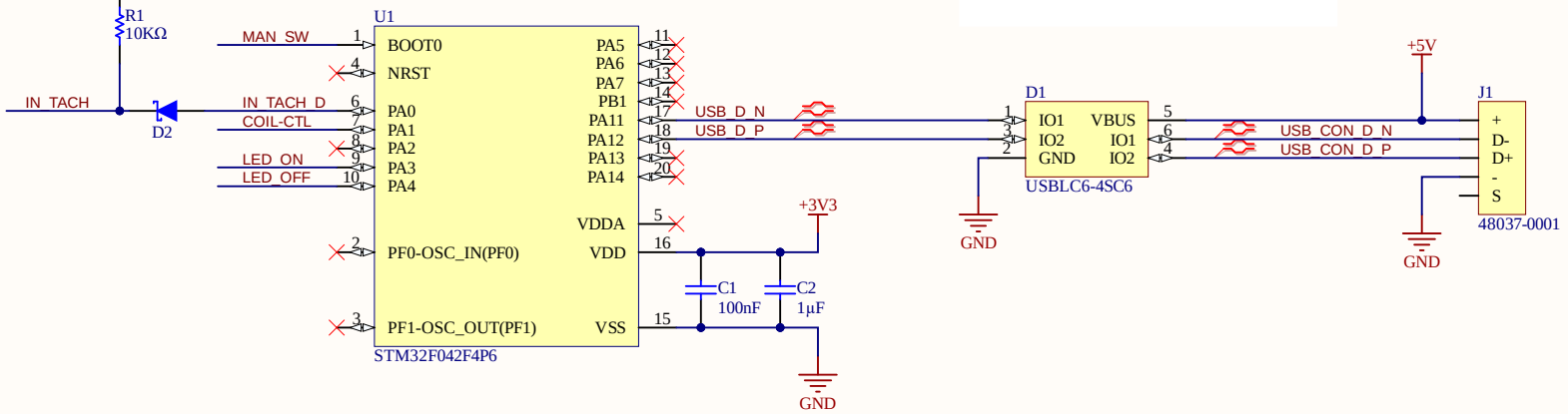

Relay interface

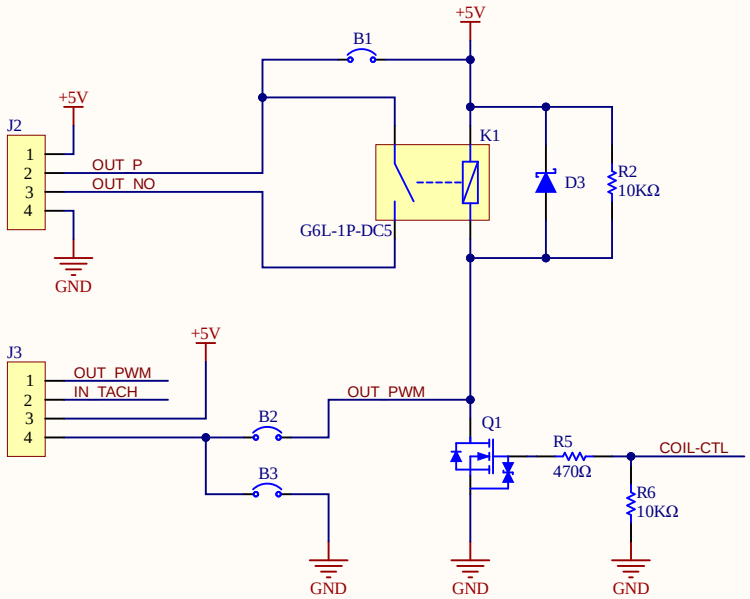

Power Supply

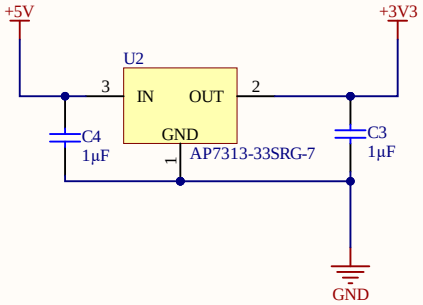

LED Status & Switch interface

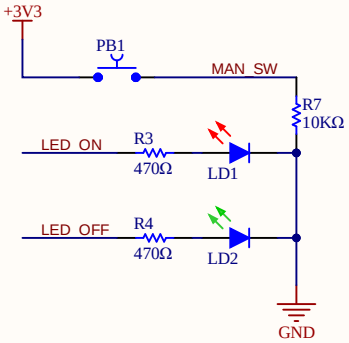

Local Fiducial

FID1 FID2

Project: *USB controlled Relay*	Revision: *A*
Title: **Main Diagram**	
Sheet: 3 of 3	Author: Alfredo Cortellini
Date: Oct-01-2024	License: CC BY-NC-SA 4.0

ITLogic

BY NC SA